instrumentation
for fluids

Ultrasonic level transmitter LU90 / LU90H

Instructions Manual

HART
COMMUNICATION PROTOCOL

R-MI-LU90 Rev.: 1 English version

TABLE OF CONTENTS

1 INTRODUCTION

The LU90 transmitter is an electronic equipment based on the transmission of ultrasonic waves to measure the distance to a liquid or solid in a vessel.

The electronic circuit offers the following features:

- Emission and reception circuits for the ultrasonic signals, and microprocessor treatment.
- Alarm outputs with programmable hysteresis level.
- Programmable current output proportional to the distance or level.
- HART ™ protocol compatibility (model LU90H).

2 INSTALLATION

2.1 General

To make the instrument works in the best conditions, it is important that the bottom face of the sensor be installed parallel to the surface of the product to be measured. In the case of liquids, the face of the transducer should be horizontal.

It is important to avoid installing the instrument at the center of the vessel. In some cases may appear unwanted echoes that affect the measurement. The installation at the center is only advantageous in vessels with tapered bottom, as well distances can be measured to the bottom.

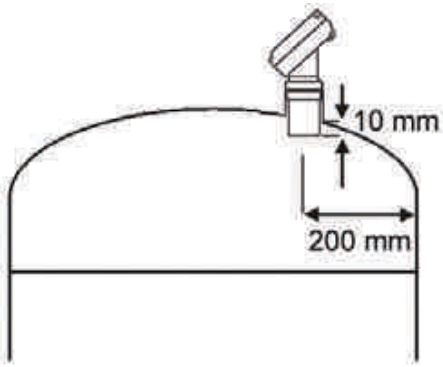

The transmitter LU90 should be installed at a minimum distance of the walls of the vessel about 200 mm, so that they could not give unwanted reflections.

The hose where the instrument is installed should be such that the bottom of the instrument excel at least 10 mm below it, as shown in the drawing.

Screw the instrument in the hose with an appropriate key, always by the flats for this purpose. The maximum torque is 25 Nm.

Never use the electronics housing for threading the device to the vessel.

2.2 Measuring range

The minimum distance that the instrument can measure is called dead zone. If the product were to be closer to that distance, the display indicates dashes instead of the measured value, and the loop current will be 3,6 mA.

Model	Dead zone	Max. distance (liquids)	Max. distance (solids)
LU91 / LU91H	0,3 m	6 m	3,5 m
LU93 / LU93H	0,45 m	12 m	7 m

In cases where there is a need to measure shorter distances to the dead zone, a reflector can be installed as shown in the figure.

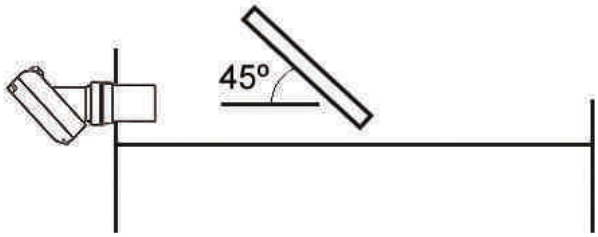

It is not desirable that the product reaches the instrument, because build-up can form on the transducer, that would affect the measurement.

2.3 Obstacles in the vessel

The LU90 must be installed so that the ultrasonic beam can not find anything in their path, as this could lead to unwanted echoes and incorrect measures.

In some cases, inclined reflectors can be placed in front of an obstacle, so that the beam in this region was diverted and the reflected signal do not return to the instrument.

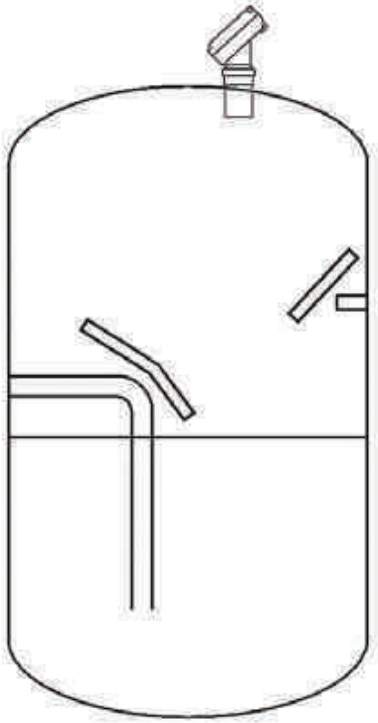

2.4 Filling entries

It is not recommended to install LU90 in the upper zone of a filling entry, because the instrument could detect the level of the jet filling instead of the level of the stored product.

2.5 Foams

Some liquids generate foams when they are in movement. In vessels with agitators, or in the filling processes, important layers can be generated that weaken the reflected signal which is essential for measuring the level.

In a lot of cases the problem of the foam and wave turbulences can be solved by putting a standpipe.

2.6 Standpipe measurement

It is based on placing a tube in the tank so that the instrument measures the level inside the tube.

The length of the tube depends on the distance that you want to measure, or the minimum level desired.

The diameter of the tube should be higher than the screw of the instrument (>2 inches or 50 mm).

If the standpipe is composed of several sections, it is necessary that the interior wall is free from defects (welding, edges, etc.) that could be interpreted as a false measurement. In the same way, if the product is capable of leave inlaid inside the tube, they can lead to erroneous measurements.

3 ELECTRICAL CONNECTION

In order to make the electrical connection of the instrument, the transmitter LU90 has a screw terminal strip.

For the electrical installation it is recommended to use multiple conductor cables with individual cable sections in the order of 0.25 to 0.5 mm^2 in order to make it easier to connect. It is better to maintain the cables connected to the power supply separated from the cables with low level signals (4-20 mA etc.).

Before starting the installation, check that the cable glands are the right size for the cables to be used, this will guarantee the instrument will stay watertight. The PG 11 cable glands used are for cables with outside diameters between 6 mm and 10 mm.

Peel the outside insulation to free the inner cables. It is recommended to tin the ends of the wires to avoid loose ends. Pass the cables through the cable glands and screw down in the corresponding positions of the terminal strip. Once the wiring is finished make sure that the cables are well gripped by the cable glands to maintain the degree of protection.

Before starting to install the equipment, check that the supply voltage available is the same as marked on the label of the instrument.

To help in the connecting of the equipment, the description of the terminals is marked on the printed circuit next to the terminal strip.

The LU90 series are instruments that use 2 wires for the power supply and 2 wires for the analog output. On the page 8, examples of the possible connections for the power supply and analog output can be seen.

3.1 Power supply connection

Terminal	
E	Earth
-	0 V (-)
+	24 V (+)

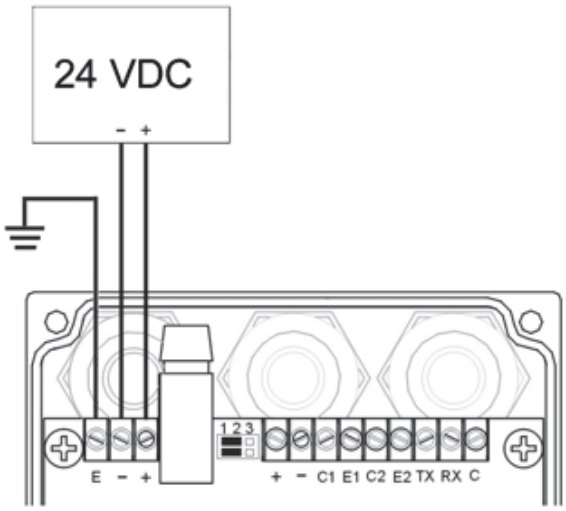

3.2 Analog output connection

Terminal	
+	mA (positive).
-	mA (negative).

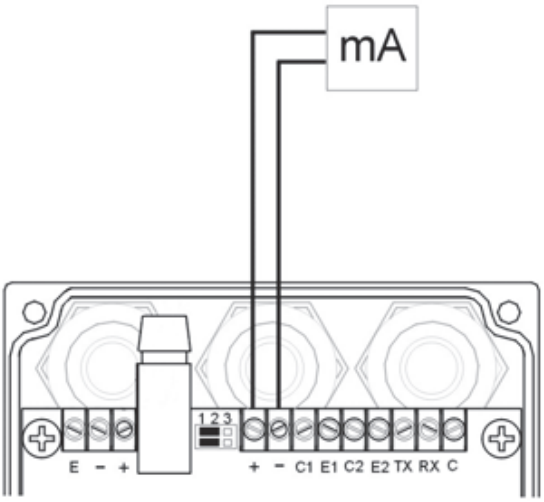

The analog output can be either active (that means the receptor must be passive) or passive (that means the receptor must supply the power for the current loop). It is recommended to use a receptor with an input resistance of less than 700 Ohms to guarantee correct operation.

To configure the analog output type (active or passive) there are two jumpers situated just behind the terminal strip. For the passive mode the jumpers must be between pins 2 and 3 and for active mode the jumpers must be between pins 1 and 2.

In the case of using HART ™ communication the output mode should be passive. Normally a HART ™ master is active (for more details about the communication and installation with HART ™, see point 7).

NOTE: The analog output has protection against reversed polarity. Due to another protection against over voltages, if a loop supply voltage of greater than 32 V is connected the equipment may be damaged.

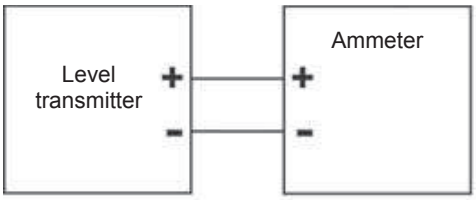

Active Output

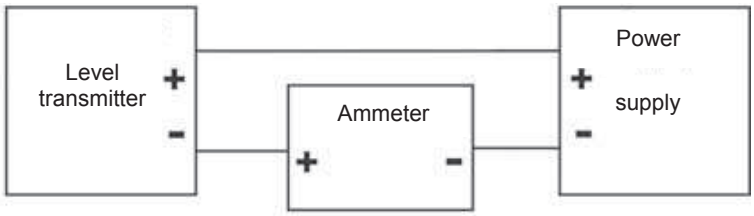

Passive Output

Possibilities of connection for the power supply and analog output

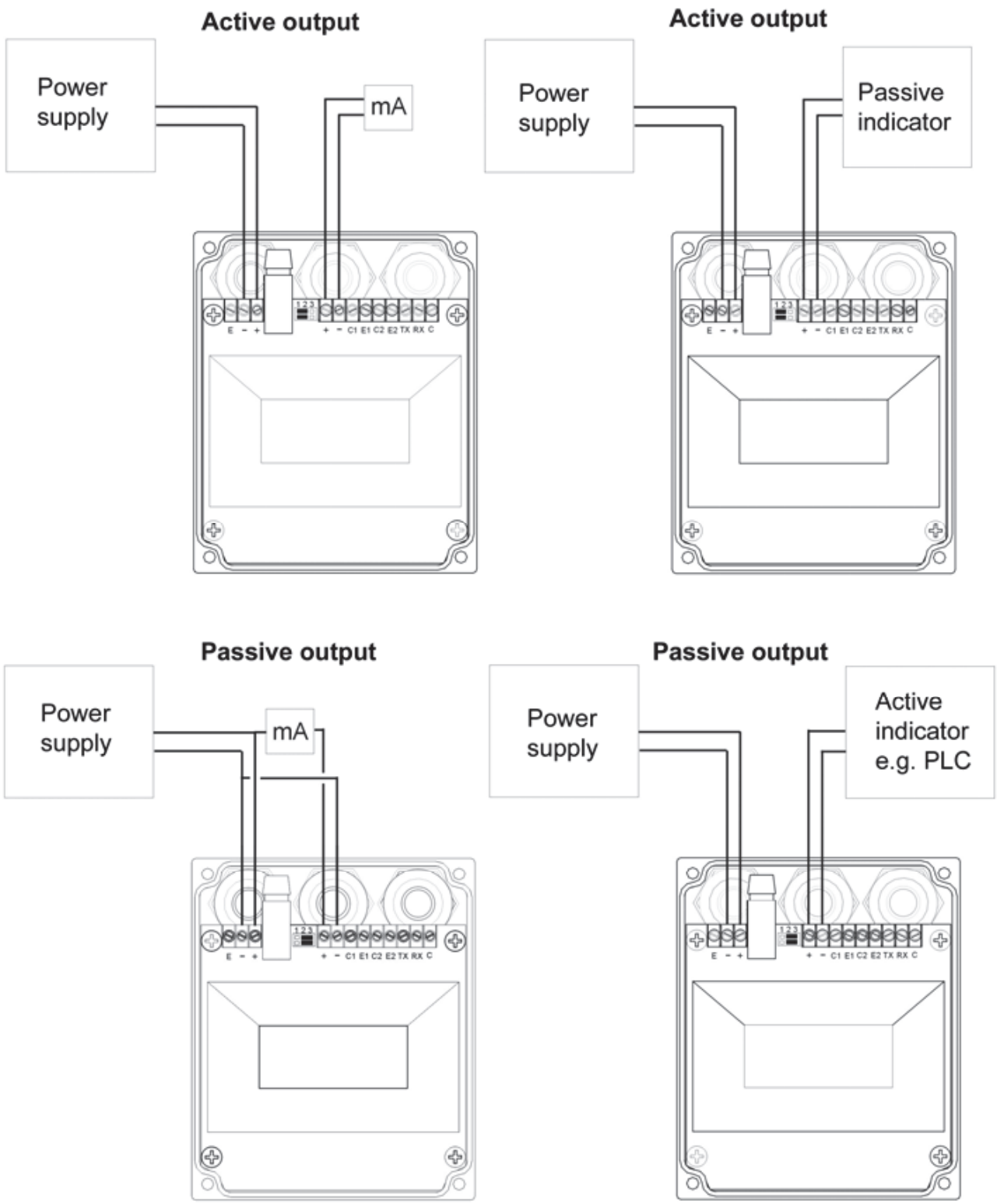

mA: Ammeter

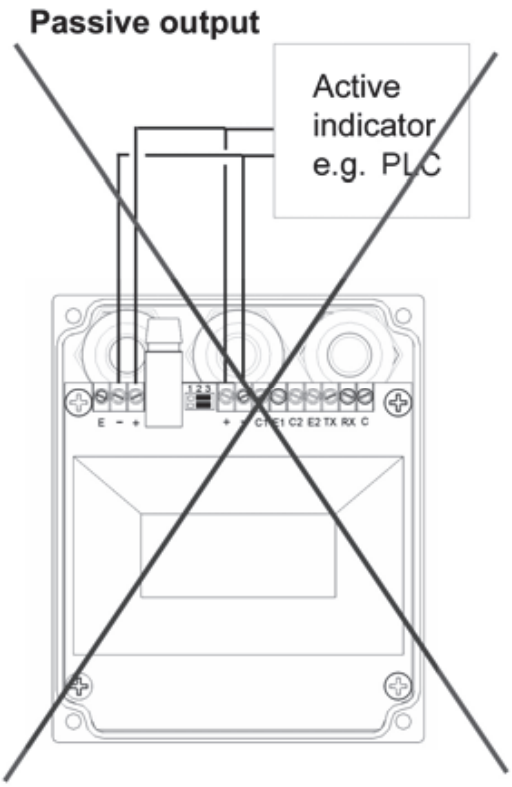

3.3 Alarm outputs connection

Terminal	
E	Emitter.
C	Collector.

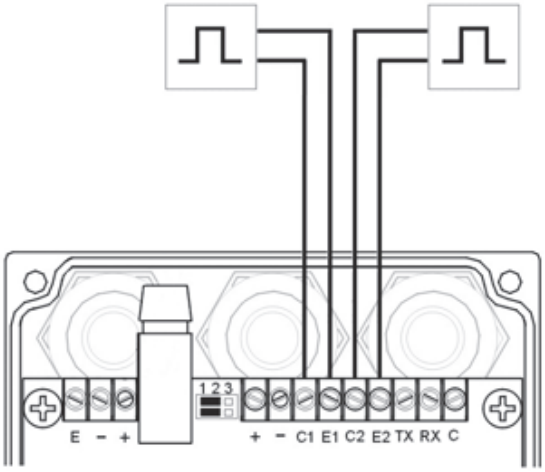

The two available alarm outputs are optoisolated. The terminals are the collector and emitter of an NPN bipolar transistor. In the case of using inductive loads, in order to protect the transistor output, it is necessary to use free diodes (see next figure).

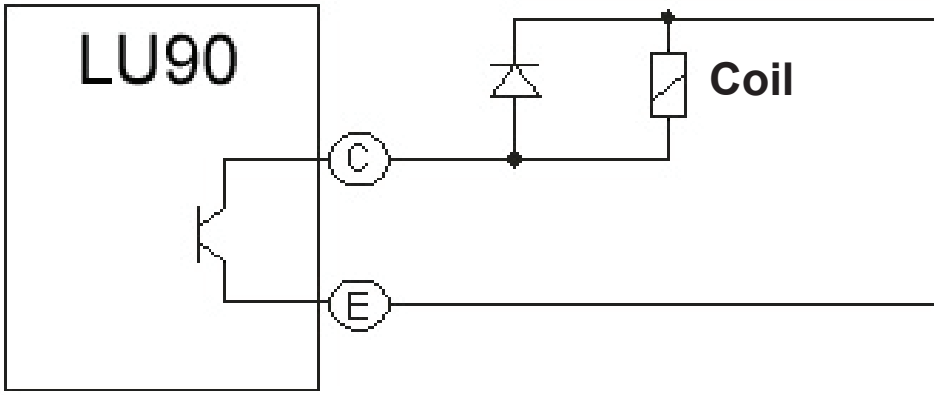

3.4 Connection examples

The two usual ways to connect the alarm outputs are NPN or PNP modes, depending on if the load is connected to the positive or negative terminal.
In the following figures, an example of connection for the alarm 2 in NPN and PNP mode can be seen.

NPN connection

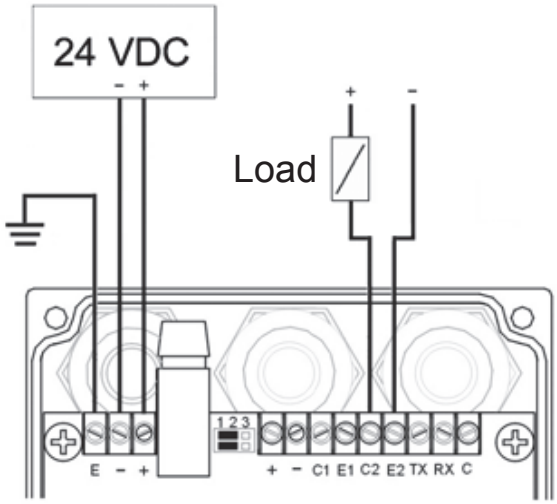

PNP connection

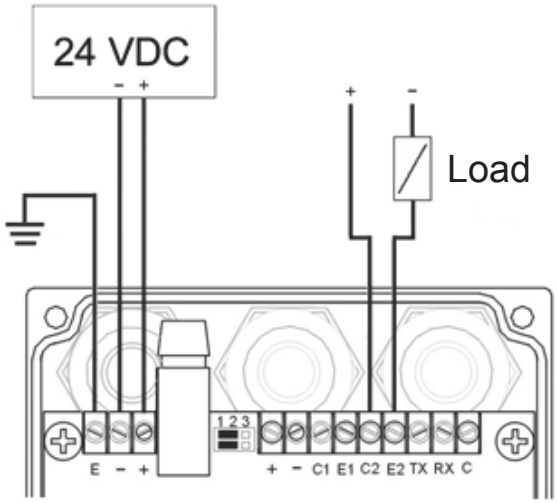

The power supply for the outputs doesn't need to be the same as the power supply for the instrument, because they are galvanically isolated. Is for this reason that the power supplies are shown separated in the two figures .

If only one power supply is available, there are no problem in sharing the power supply of the instrument with the outputs.

4 OPERATION

The instrument is delivered generally calibrated and programmed to indicate a distance. If you want to change any configuration parameter, the keyboard can be accessed without the need to remove the top cover.

If the instrument has not been previously programmed, or due to an alteration in the data memory, the instrument recovers default factory settings, and the word "PRESET" appear on the display. This indication disappears once the sequence of programming is completed.

4.1 Echo intensity verification

Once installed the instrument, the echo intensity can be verified. This intensity depend on the distance to the target, the type of product where the wave is reflected and conditions of installation.

To check the intensity, just turn on the equipment and press the keys (←) y (□) simultaneously. You will see the following screen:

The echo intensity is displayed on a scale of 0 to 10.

If the distance of the product at the time of verification is greater than half the maximum distance measurement, it is normal that the intensity has a low value.

In the event that the distance is less, if the value of the intensity is low, it may be due to two reasons:

a) That the product has a high absorption coefficient. This means that an important part of the wave is absorbed by the product and is not reflected to the instrument. In this case, the maximum measuring distance will be less than the specified in the characteristics of the instrument.

b) That the instrument has not been installed correctly. As the face of the transducer is no longer parallel to the surface of the product, part of the reflected signal does not return to the instrument, thus decreasing the intensity of the echo.

To exit the mode of verification of intensity, you need to press again the keys (←) y (□) simultaneously.

4.2 Display modes

The working screen can indicate three different values. They can be changed by pressing the key (↑).

Distance (d). In this case the screen indicates the distance between the sensor and the surface of the blank where the ultrasonic wave is reflected.

Level (L). It shows the level or height from a reference, usually the bottom of the vessel, to the liquid or solid surface.

In order to show the level correctly, the parameter bottom distance (bd) must be previously programmed (see point 5.2).

Percent (P). It displays the percent of filling between two references, normally the bottom of the tank and the maximum level. These two parameters have to be correctly programmed (see points 5.2 and 5.3).

4.3 Dead zone indication

If the measured distance is inferior than the minimum measuring distance, we can say that the product is in the dead zone (see point 2.2). In this case the LU90 can not make a correct measurement.

In this situation the instrument will display 6 dashes instead the measured value, and the analog signal output will give 3.6 mA, indicating incorrect measurement due to dead zone.

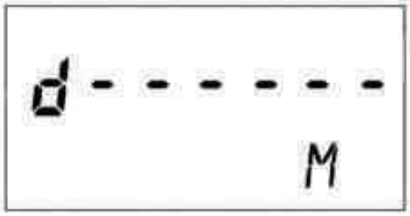

4.4 Echo loss indication

If the distance is longer than the maximum measuring distance, the instrument will not receive reflected signal. It is also possible that if the product is not adequate for ultrasonic measurement, there will be not received signal.

In this case the instrument will display 5 points instead of the measured value, and the analog signal output will give 22 mA, indicating incorrect measurement due to echo not found.

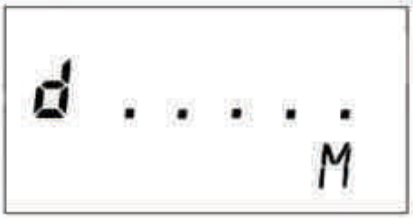

5 CONFIGURATION

Touching the two keys (↑) & (←) at the same time the configuration process is entered. In the configuration will appear the parameters necessary to adapt the instrument to the installation.

To change a digit, touching the key (↑) the flashing digit will be incremented. When the value of 9 is reached on the next increment it go to zero.

With the key (←) we move to the next digit to the left. If we are on the seventh digit we go back to the first digit.

In all the configuration screens the key (□) is used to jump to the next screen without making any changes in the configuration data even if digits or working modes have been changed.

When we have the required data on the screen, touching the two keys (↑) & (←) at the same time, the data will be stored in memory and the next screen appear.

5.1 Measuring units

The instrument can indicate the measured distance or level in meters or feet.

To change the measuring units, press the key (↑).

5.2 Distance to the bottom of the vessel

On the first screen, the distance from the installed instrument to the bottom of the vessel is programmed (bottom distance).

This parameter is necessary if we want the instrument to work in level mode or percentage mode (see section 4.2).

The figure shows the distance bd. The measurement in level or percentage mode shall refer this distance. In the case of a vessel base is not flat, we must take the bd distance between the tip of the instrument, and the point that we take as zero level.

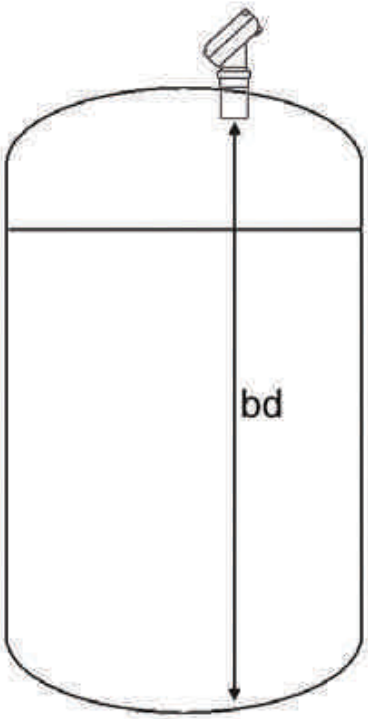

5.3 Distance to the top of the vessel

This distance is necessary if we want the instrument to function in percentage mode (see section 4.2).

The percentage of filling is calculated taking into account the points distance to the bottom (see section 5.2) and distance to the top, according the following equation:

$$\% = \frac{(bd - td) - (d - td)}{(bd - td)} \times 100$$

When the distance between the product and the sensor is bd, the displayed percentage is 0%.

When the distance between the product and the sensor is td, the displayed percentage is 100%.

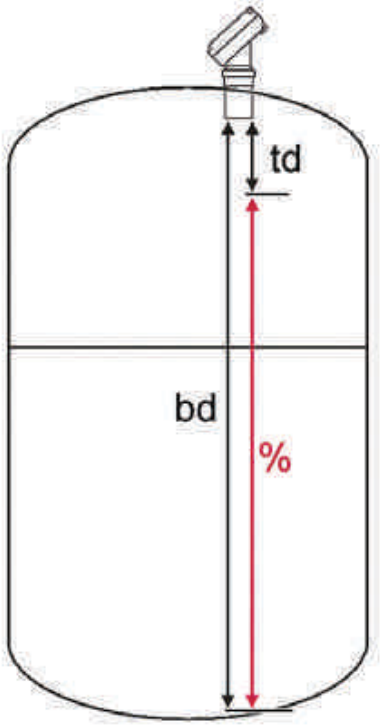

5.4 Default display mode

Display modes of distance and level explained in section 4.2 can be programmed as modes by default. Thus, the instrument will always be working in this mode even if there is a power fail.

The remaining screens will require the parameters in the chosen mode.

5.5 Current output

Next, it appears the loop current programming screens.

On the first screen is programmed the level (or distance) at which the instrument will give 4 mA at its output (lower range). Next, the level (or distance) at which it will give 20 mA (upper range) is programmed.

The level "lower range" can be greater than the "upper range" or vice versa.

5.6 Alarms

In these screens we select the actuation points of the two alarms and the level of hysteresis. By level of hysteresis we say the difference between connection and disconnection of the output. In some cases the level of a vessel is not stable due to waves generated by agitators, etc. To avoid that an alarm output is continuously moving from activate to deactivate state, we must program the points of connection and disconnection.

Alarm 1. Point of activation

Alarm 1. Point of deactivation

Alarm 2. Point of activation

Alarm 2. Point of deactivation

Example

Suppose you work in level mode. If the activation point is programmed to 1 m and the deactivation point is programmed to 0.9 m, when the level is zero the output will be off. When the level reaches a height of 1 m the output will go on and it will not go off until the level falls below 0.9 m.

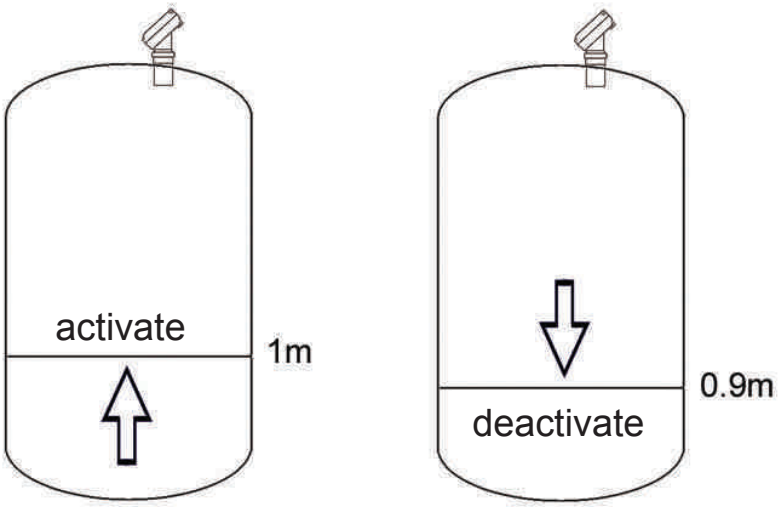

If we program an activation point of 0.9 m and a deactivation point of 1 m, when the level is zero the output will be on. When the level reaches a height of 1 m the output will go off and it will not go on until the level falls below 0.9 m.

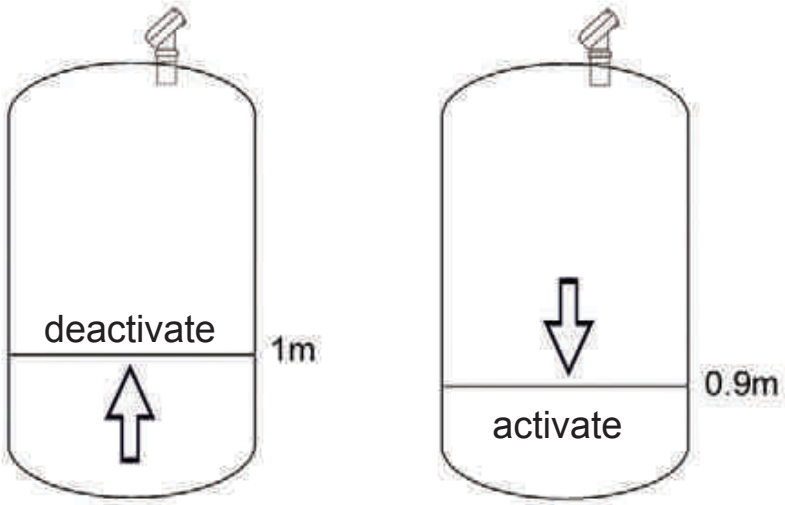

5.7 Damping

The LU90 transmitter has an adaptive filter (damping) to provide stable level and analog output readings.

The configuration of this filter can be very useful in the cases where the readings have some instability (due to waves, foams, solids, etc…).

Only the level indication of the display and the analog output are affected by the filter. The alarm outputs act according to the instant readings. By selecting a filter with a longer or shorter integration time will provide more or less stable readings and will also affect the response time to small variations of level.

The integration time is selected in seconds, with a minimum value of 0.1 and a maximum value of 20.0 seconds. For example, with an integration time of 15 seconds, the display will indicate the average level over the last 15 seconds from the last update of the display. This doesn't mean that the display is refreshing its data every 15 seconds. The display shows a new value several times per second, indicating an average of the level values of the last 15 seconds.

When there is a sudden variation of the level then the filter should react as fast as possible to give a correct reading of the new value. For this, the filter controls for each reading the deviation of the instant level with respect to the average level. If this deviation exceeds the 6% of the average value, the filter will stop acting, indicating the instant value, and will start again the filtering process.

For example, consider an instrument measuring an average level of 2.4 m.

The filter will continue to give average readings whilst the instant flow rate does not deviate more that 6% (0.14 m).

In the LU90 transmitter, if during a configuration sequence a HART™ command, which should be attended, is received, the local configuration sequence will not be valid and all the data of that configuration sequence will be lost. The screen will return to the normal working screen and the word “PROG” will be displayed to show that this event has occurred. The word “PROG” will be turned off when touching either of the two keys (↑) or (←).

5.8 Serial number and software version

Touching the three key at the same time we access a screen where the serial number of the converter is shown.

To return to the normal working screen touch any key.

6 KEYBOARD DISABLE AND “WRITE PROTECT”.

The instrument has a jumper, situated behind the display to the left, which can be used to avoid changes in the configuration. When the jumper is connected the instrument can be configured by means of the keyboard and via HART™. When the jumper is removed, the keyboard is disabled and “Write Protect” is activated for HART™, thus avoiding any changes in the configuration.

7 HART™ COMMUNICATION

The LU90H transmitter has a MODEM for HART™ communication.
The detail of the characteristics with respect to the HART™ communication are available in the corresponding “Field Device Specification” document.

To be able to use HART™ communication, a resistance (R ext.), whose value must not be lower than 200 Ohms, should be added to the current loop. The points at which a terminal or a PC with a HART™ modem can be connected are shown in the following figure.

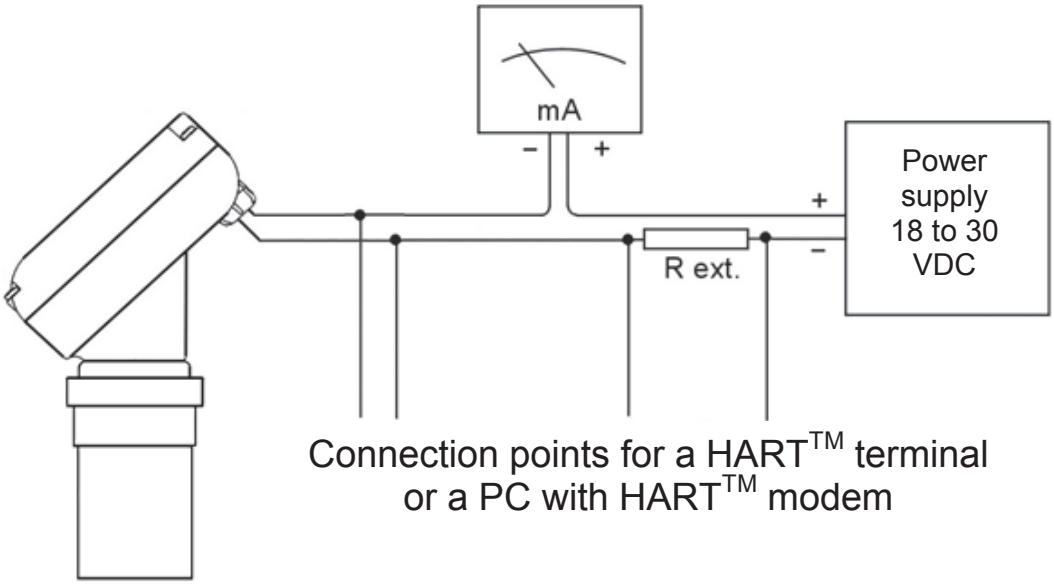

Resume of the principal communication characteristics:

Manufacturer, Model and Revision	Tecfluid S.A., LU90 transmitter, Rev. 0
Device type	Transmitter
Hart Revision	6.0
Device Description available	No
Number and type of sensors	1, exterior
Number and type of actuators	0
Number and type of host side signals	1, 4 – 20 mA Analog
Number of Device Variables	2
Number of Dynamic Variables	1
Mappable Dynamic Variables	Yes
Number of Common Practice Commands	13
Number of Device Specific Commands	6
Bits of Additional Device Status	13
Burst mode?	No
Write Protection?	Yes

8 MAINTENANCE

No special maintenance is required .

For cleaning, a humid cloth can be used, and if necessary with a little soap. Solvents or other aggressive liquids which could damage the polycarbonate housing should not be used.

8.1 Fuse

In the event that the fuse blows, this should be replaced with a slow blow “T” fuse, size Ø5 x 20 mm and of the same rating as indicated on the label inside the equipment.

9 TECHNICAL CHARACTERISTICS

9.1 Materials

Sensor: PP, PVDF
Housing: Polycarbonate.

9.2 Connection to the tank

LU91: G2 (BSP) thread.
LU93: G2 1/2 (BSP) thread.

9.3 Measuring range

LU91: 0,3 m … 6 m (solids until 3,5 m)
LU93: 0,45 m … 12 m (solids until 7 m)

9.4 Power supply

18 ... 30 VDC.
Power consumption: ≤ 1.5 W

9.5 Analog output

4-20 mA. Active or passive.
Error of measure signals of 3.6 mA and 22 mA

9.6 Alarm outputs

Two NPN opto-isolated. Vmax: 30 VDC. Imax: 30 mA.

9.7 Measuring indication

Nº of digits:	4 (1 integer and 3 decimals)
Digit size:	7 mm

9.8 General characteristics

Protection rating:	IP67
Ambient temperature range:	-40 ... +70 ºC (display only to 60 ºC)
Maximum working pressure:	200 kPa (2 bar)
Resolution:	1 mm
Uncertainty:	< 0,25% of measuring range
Repeatability:	< 0,25% of measuring range

9.9 Electrical characteristics referred to the analog loop and communications

Reception impedance:

Rx	>	8,5 MΩ
Cx	<	200 pF

Conforms with EMC Directive EMC 89/336/EEC
Conforms with WEEE Directive 2002/96/EC
Conforms with PED Directive 97/23/CE

This equipment is considered as being a pressure accessory and **NOT** a safety accessory as defined in the 97/23/EC directive, Article 1, paragraph 2.1.3.

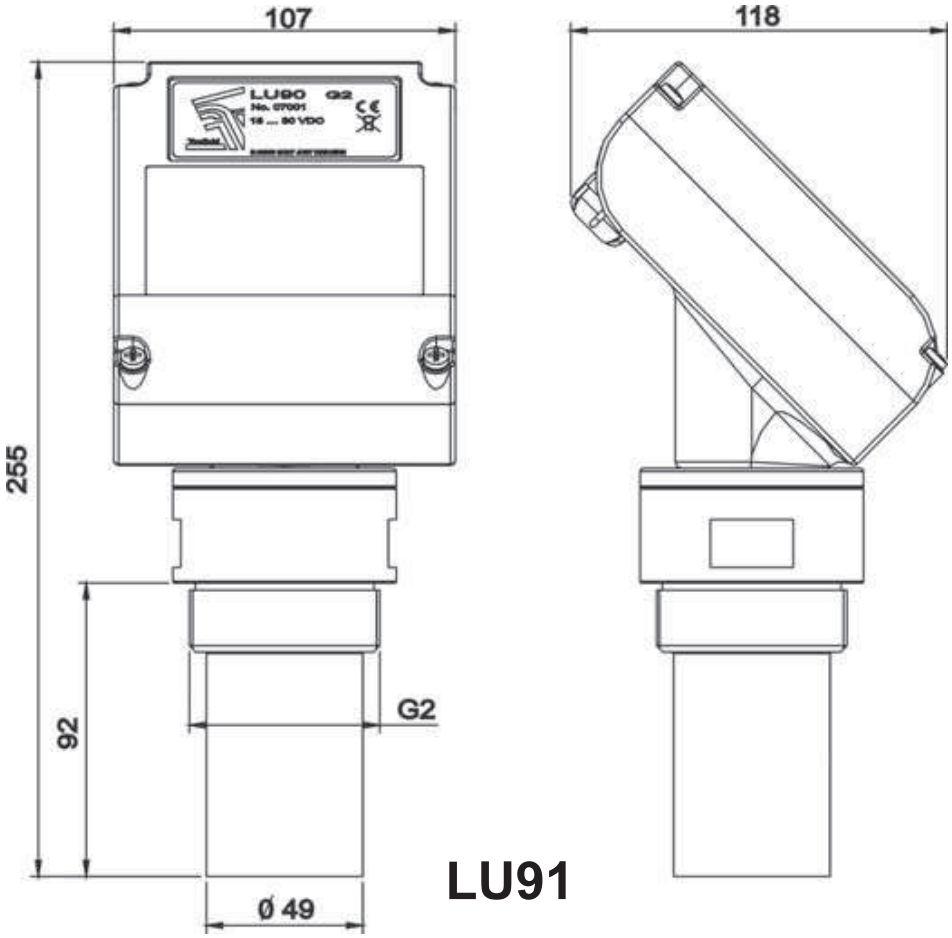
107
118
255
92
G2
Ø 49
LU91

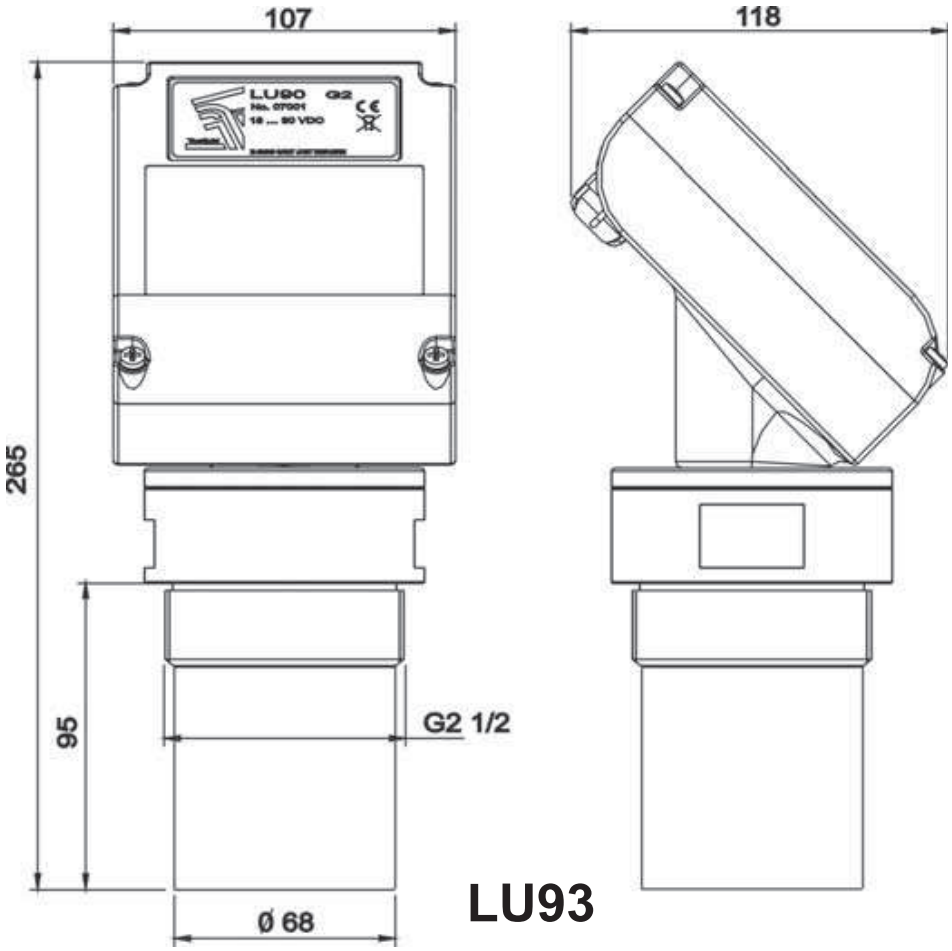
107
118
265
95
G2 1/2
Ø 68
LU93

11 TROUBLESHOOTING

Problem	Probable cause	Remedy
It appear dashes on the display	The product is in “dead zone”. The distance between the level transmitter and the product is too short.	Separate the level transmitter from the product you want to do the measurement. (see page 4).
	There is an obstacle placed in the dead zone of the instrument.	Separate the level transmitter from the obstacle (see page 4).
It appear points on the display	The ultrasonic wave reflected from the surface is very weak because the product has a very low index of reflection toward the sensor. It can happen with foams, sans, solids.	Verify that the level transmitter is the adequate for this application.
	Bad installation of the equipment.	Verify that the bottom face of the level transmitter is installed parallel to the surface of the product (see page 4).
	The sensor is out if the allowed measuring range.	Verify that the level transmitter is the adequate for this application.
The display is blank	Power supply is not adequate.	Verify the polarity of the cables of the power supply, check that they are well connected to the terminal block and there is voltage between them.
	Fuse melted.	Change the fuse (250 mA T).
The measurement is not stable	There may be some object between the sensor and the product.	Change the position of the level transmitter so that the object is not an obstacle.
	There are waves on the liquid surface.	Increase the duration of the filter (damping) (see page 12).

12 CONFIGURATION DIAGRAM

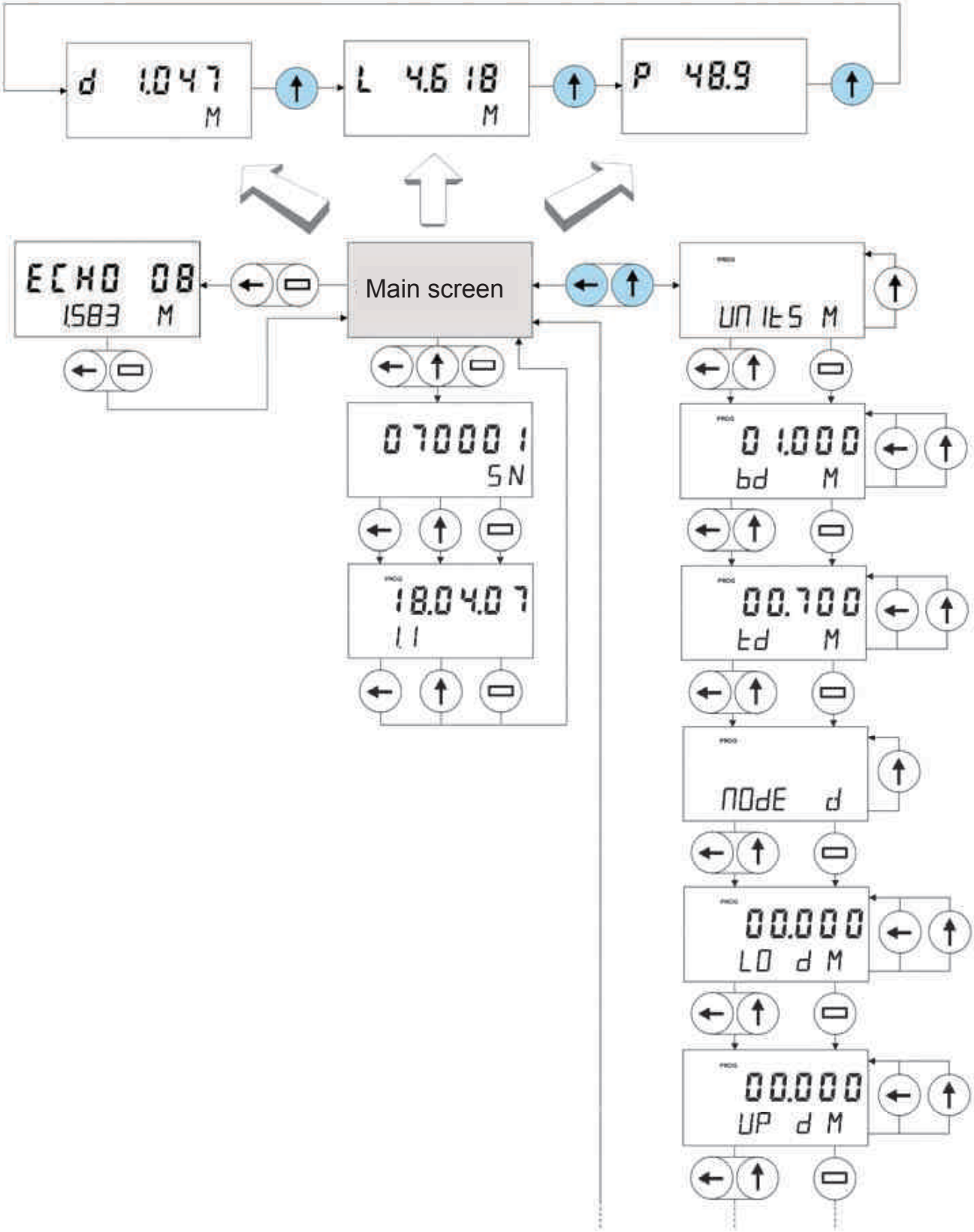

A1A: Value at which the alarm 1 will activate
A1d: Value at which the alarm 1 will deactivate
A2A: Value at which the alarm 2 will activate
A2d: Value at which the alarm 2 will deactivate
dA: Damping. Filter value to damp the measurement

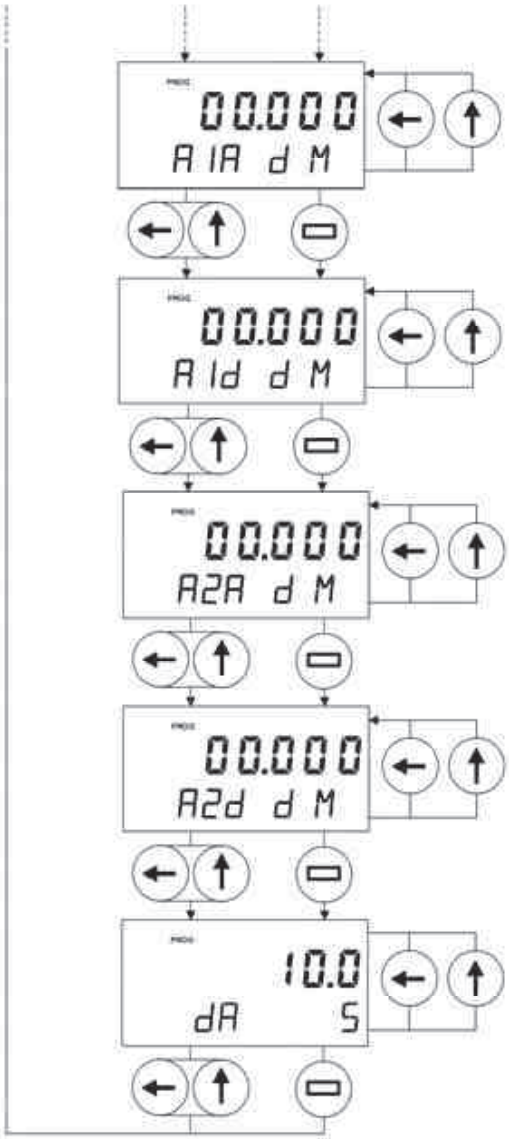

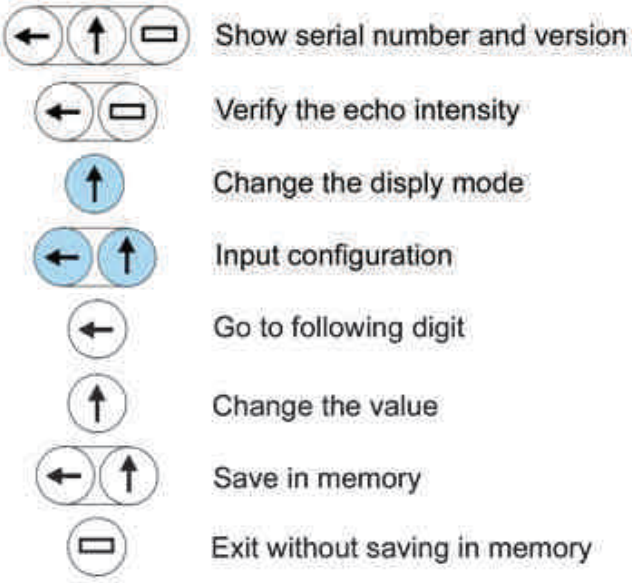

WARRANTY

TECFLUID guarantees all the products for a period of 24 months from their sale, against all faulty materials, manufacturing or performance. This warranty does not cover failures which might be imputed to misuse, use in an application different to that specified in the order, the result of service or modification carried out by personnel not authorized by Tecfluid, wrong handling or accident.

This warranty is limited to cover the replacement or repair of the defective parts which have not damaged due to misuse, being excluded all responsibility due to any other damage or the effects of wear caused by the normal use of the devices.

Any consignment of devices for repair must observe a procedure which can be consulted in the website www.tecfluid.fr, "After-Sales" section.

All materials sent to our factory must be correctly packaged, clean and completely exempt of any liquid, grease or toxic substances.

The devices sent for repair must enclose the corresponding form, which can be filled in via website from the same "After-Sales" section.

Warranty for repaired or replaced components applies 6 months from repair or replacement date. Anyway, the warranty period will last at least until the initial supply warranty period is over.

TRANSPORTATION

All consignments from the Buyer to the Seller's installations for their credit, repair or replacement must always be done at freight cost paid unless previous agreement.

The Seller will not accept any responsibility for possible damages caused on the devices during transportation.

TECFLUID
B.P. 27709
95046 CERGY PONTOISE CEDEX - FRANCE
Tel. 00 33 1 34 64 38 00 - Fax 00 33 1 30 37 96 86
E-mail: info@tecfluid.fr
Internet: www.tecfluid.fr